SCHEMATIC

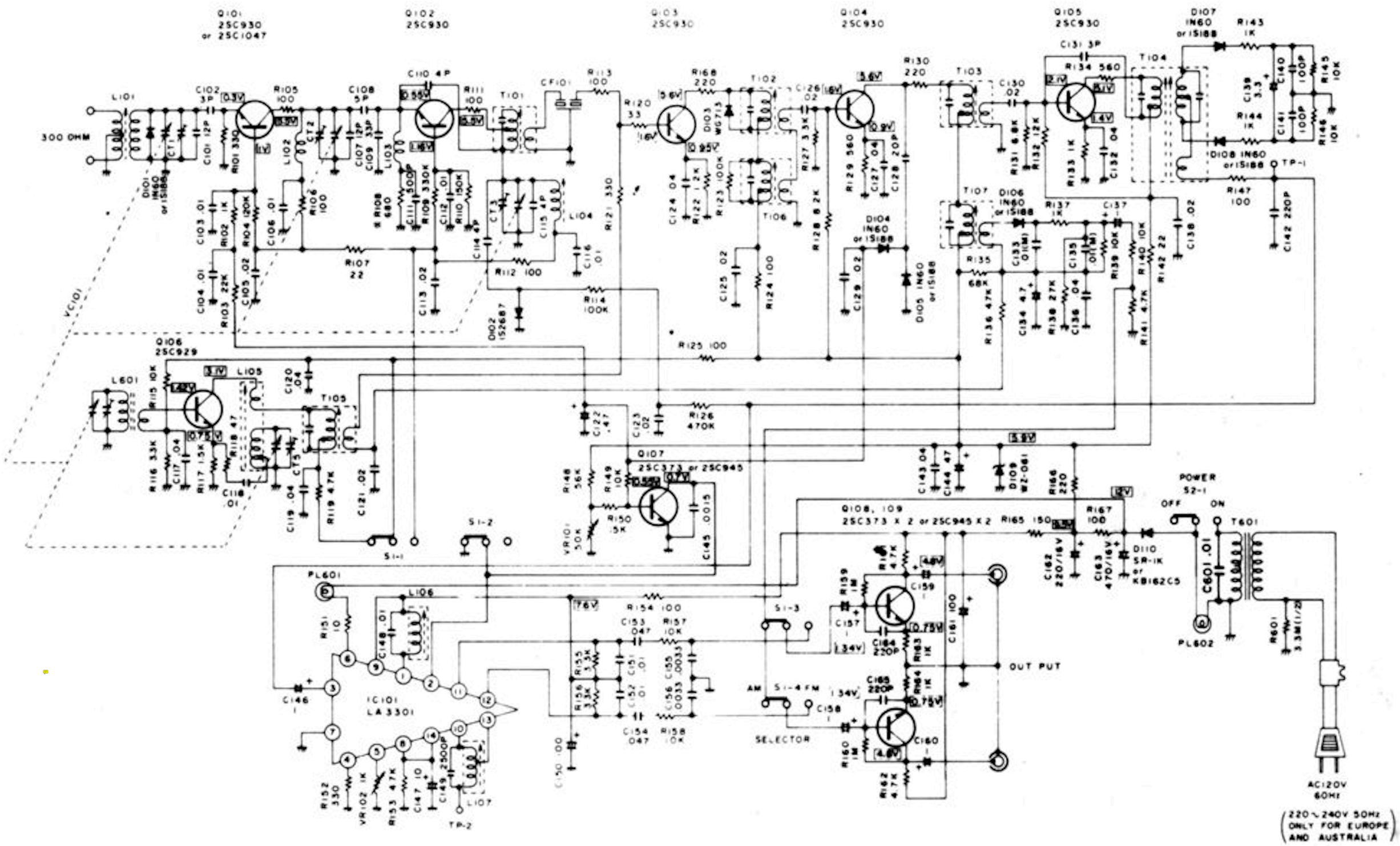

NOTES

1. RESISTANCE VALUES ARE INDICATED IN OHM ($K = 10^3$ OHM, $M = 10^6$ OHM)
2. CAPACITANCE VALUES ARE INDICATED IN μFD ($P = \mu\mu$FD)